HSF RoHS

SPECIFICATIONS
Rated Current:5.0AMP
Voltage rating:250V AC,DC
Contact Resistance:20mΩ Max
Withstand Voltage:1500V AC/Minute
Insulation Resistance:1000MΩ Min
Operation Temperature:−40°c to +105°c

Contact Material:Brass
Contact Plating:Tin Over Ni
Solder Tabs Material:Brass / Tin−plated
Insulator Material:Polyester(UL94V−0)
Standard: LCP
Max.Processing Temp: 230°C for 30−60 seconds
(260°C for 10 seconds)

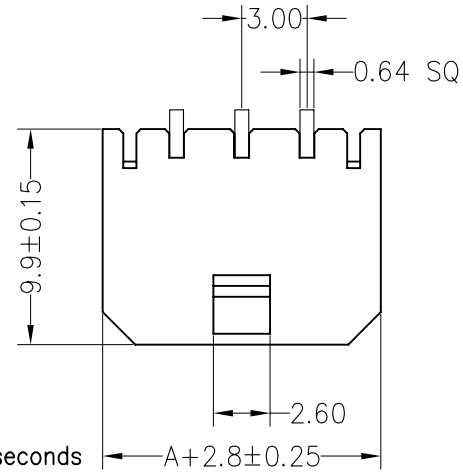

PIN NO.	Dimensions(mm)		
	A	B	C
02	6.85	3.00	
03	9.85	6.00	
04	12.85	9.00	4.70
05	15.85	12.00	7.70
06	18.85	15.00	10.70
07	21.85	18.00	13.70
08	24.85	21.00	16.70
09	27.85	24.00	19.70
10	30.85	27.00	22.70
11	33.85	30.00	25.70
12	36.85	33.00	28.70

Recommended P.C.B Layout(Top Side)
(PCB BOARD TOLERANCE±0.05)

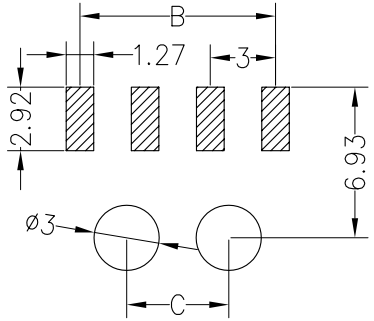

4-12P PCB LAYOUT

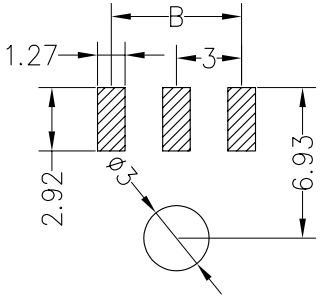

2-3P PCB LAYOUT

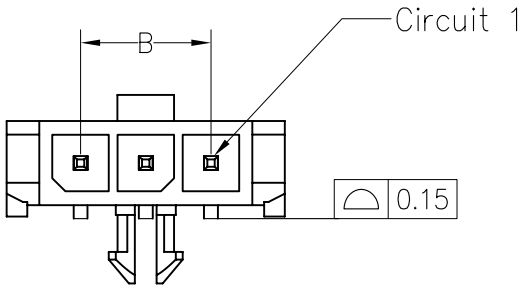

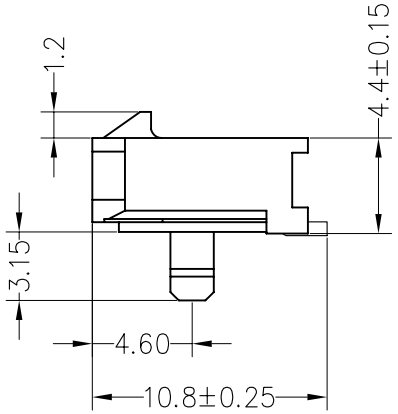

Ordering Information

JL 3001 Z - 1 XX X XX B X 01

- No.of Pins Per Row 2~12P
- Insulator Material Option: C=BK−PA6T, E=BK−PA9T, F=BK−LCP
- Contact Plating: G0:Gold Flash, S0:Gold Flash/Tin, SN:Tin, SM:Matte−Tin
- Packing: 0=Pe bag, T=Tube, R=Reel

REV	DATE	MODIFICATION DESCRIPTION	CHANGE
A0	2012.05.22	NEW DRAWING	

OPERATION	
X.X	±0.30
X.XX	±0.20
X.XXX	±0.10
Angle	±3°
DIM	TOL

DRAW	BEN	12.05.22
CHECK		
APPROVE		

SCALE	FIT
UNIT	mm
SIZE	A4
SHEET	1/2
PROJ.	

JiLN® 深圳市锦凌电子有限公司
SHENZHEN JINLING ELECTRONIC CO.,LTD
Tel: 86-755-2997-5806/5802 Fax: 86-755-2997-5992

PART NO.	JL3001Z−1XXXXXBX01
TITLE:	MX3.00WF Npin 90° SMT With post